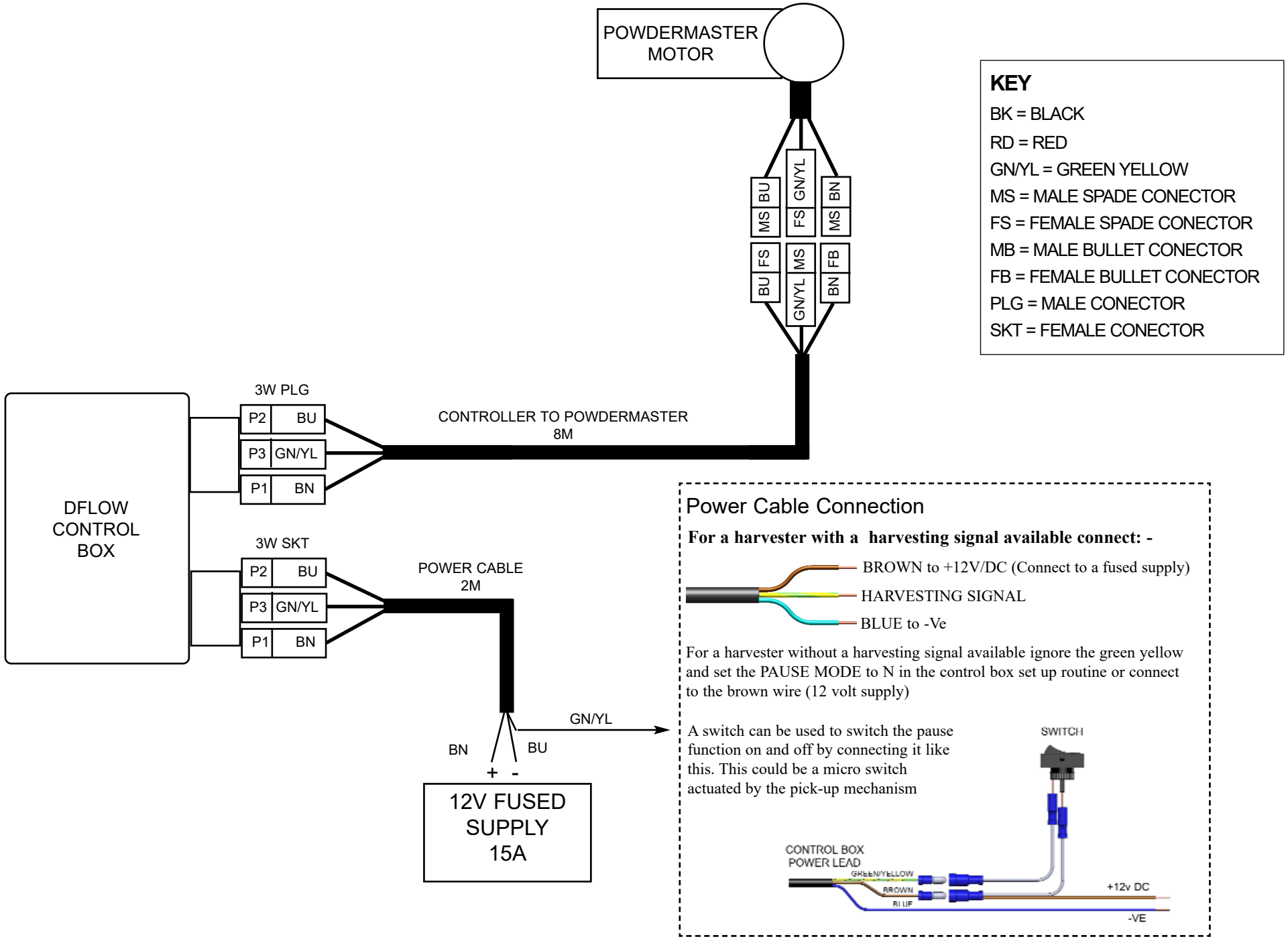DFLOW POWDERMASTER WIRING DIAGRAM